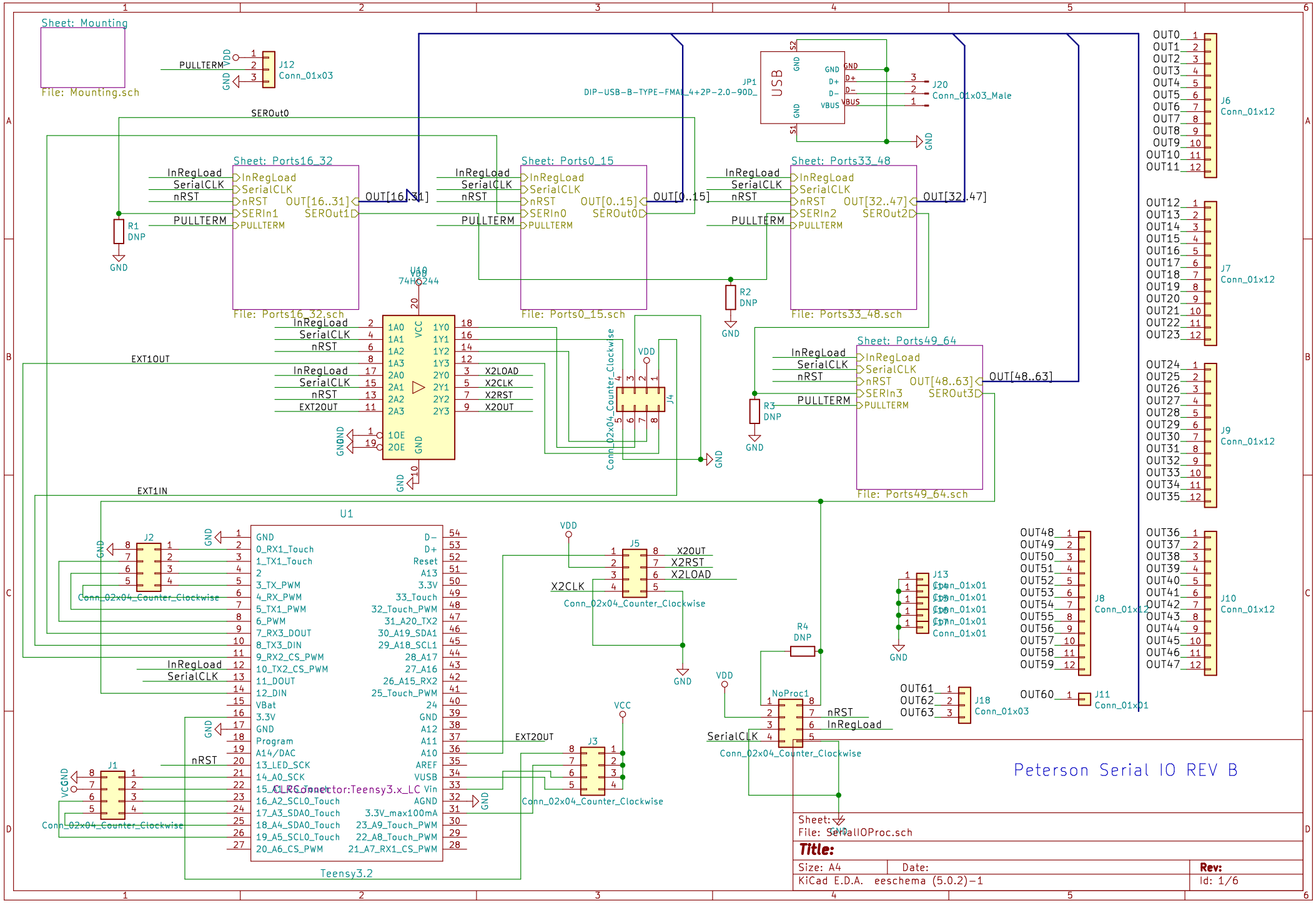
Sheet: Mounting
File: Mounting.sch
J12
Conn_01x03
PULLTERM
SEROut0
Sheet: Ports16_32
File: Ports16_32.sch
OUT[16..31]
Sheet: Ports0_15
File: Ports0_15.sch
OUT[0..15]
Sheet: Ports33_48
File: Ports33_48.sch
OUT[32..47]
Sheet: Ports49_64
File: Ports49_64.sch
OUT[48..63]
JP1
DIP-USB-B-TYPE-FMAL_4+2P-2.0-90D_
J20
Conn_01x03_Male
R1
DNP
R2
DNP
R3
DNP
R4
DNP
U10
74HC244
EXT1OUT
EXT2OUT
EXT1IN
X2LOAD
X2CLK
X2RST
X2OUT
J4
Conn_02x04_Counter_Clockwise
J5
J2
J1
J3
U1
Teensy3.2
nRST
VCGND
NoProc1
SerialCLK
InRegLoad
J6
J7
J8
J9
J10
J11
J13
J18
Conn_01x12
Conn_01x01
Conn_01x03
Peterson Serial IO REV B
Sheet: SerialIOProc.sch
Title:
Size: A4
Date:
Rev:
KiCad E.D.A. eeschema (5.0.2)-1
Id: 1/6

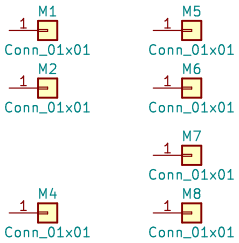

Sheet: /Mounting/
File: Mounting.sch

Title:

Size: A4	Date:	**Rev:**
KiCad E.D.A. eeschema (5.0.2)-1		Id: 2/6

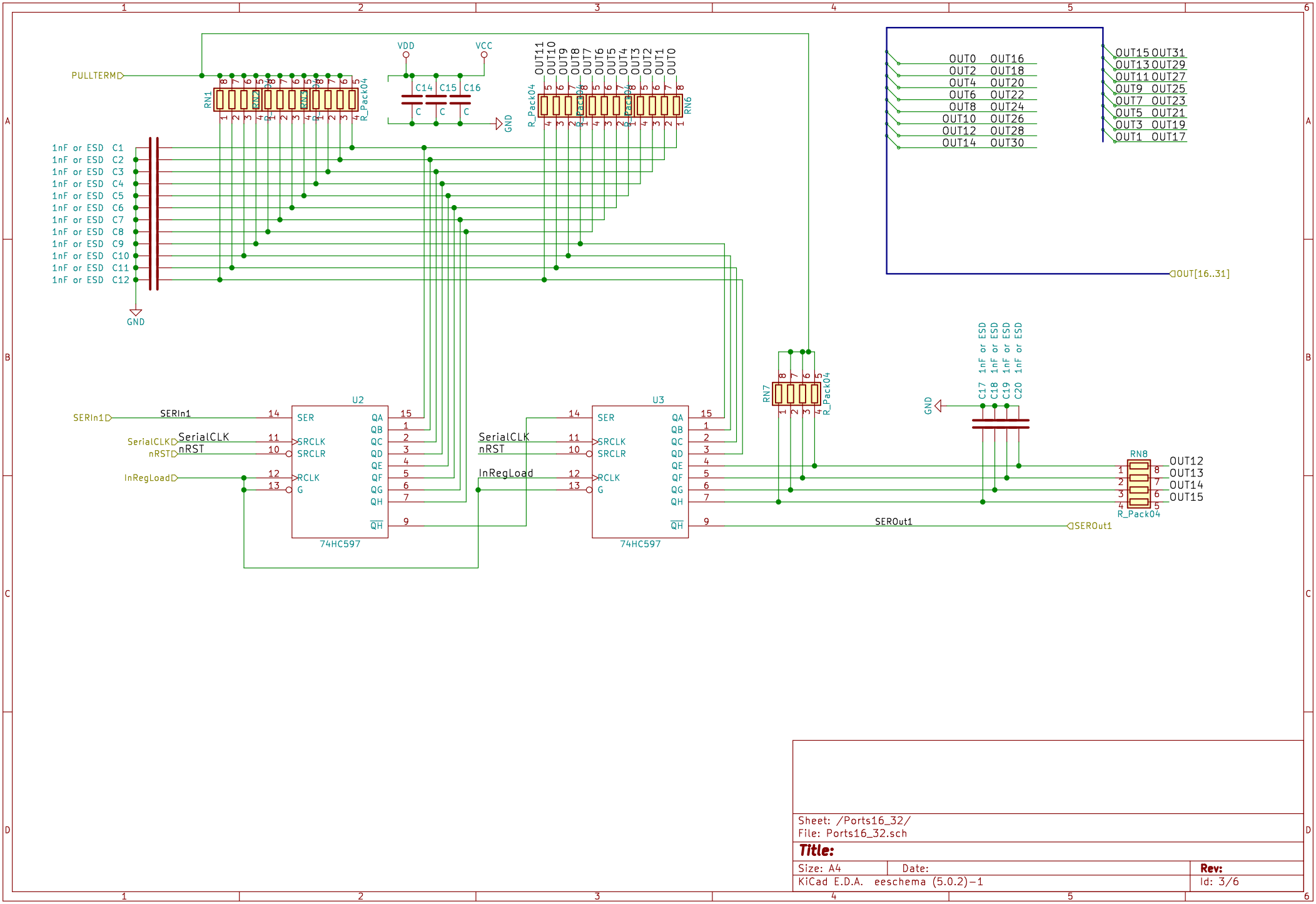

Sheet: /Ports16_32/
File: Ports16_32.sch

Title:

Size: A4	Date:	Rev:
KiCad E.D.A. eeschema (5.0.2)-1		Id: 3/6

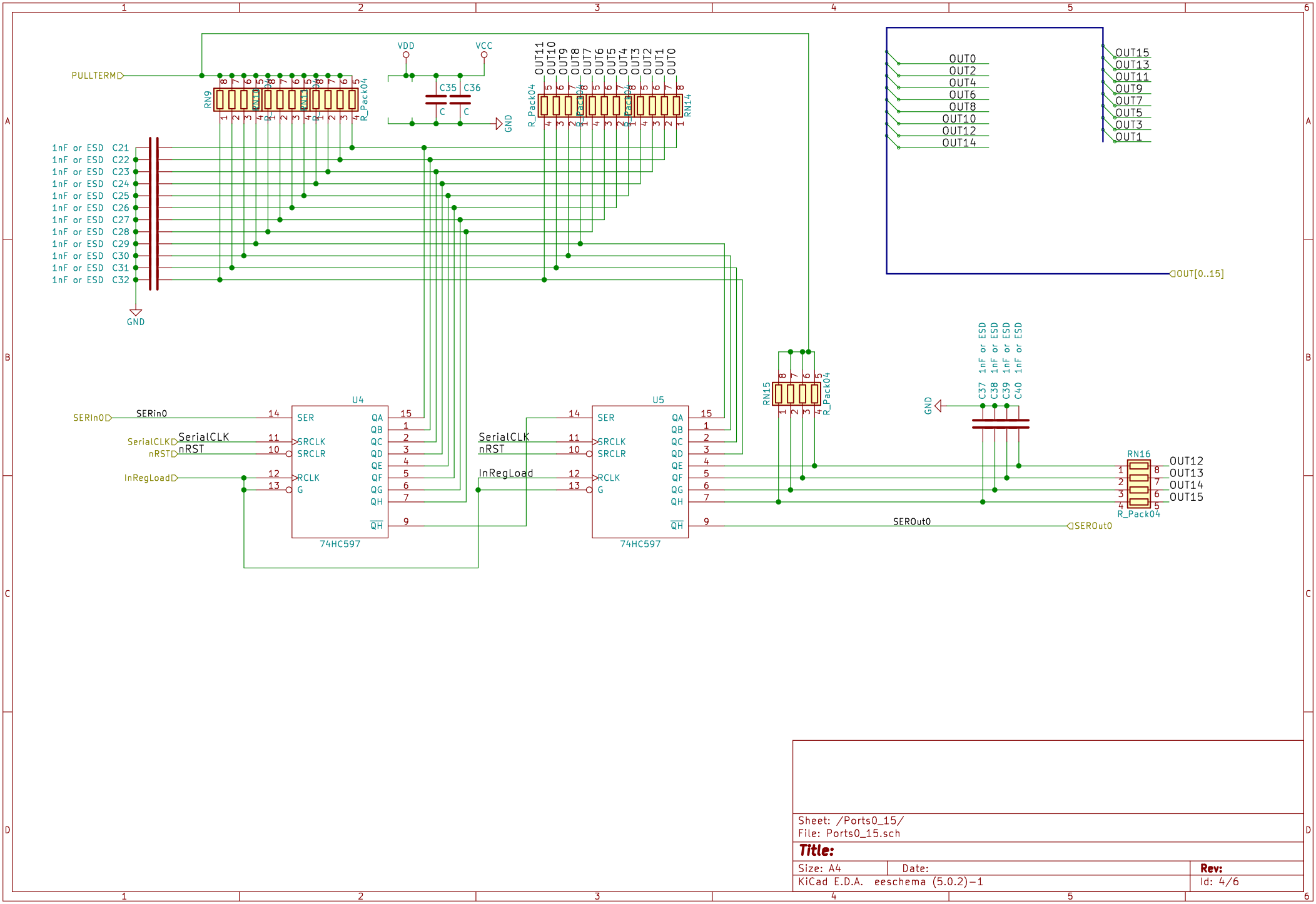

Sheet: /Ports0_15/
File: Ports0_15.sch

Title:

Size: A4	Date:	Rev:
KiCad E.D.A. eeschema (5.0.2)-1		Id: 4/6

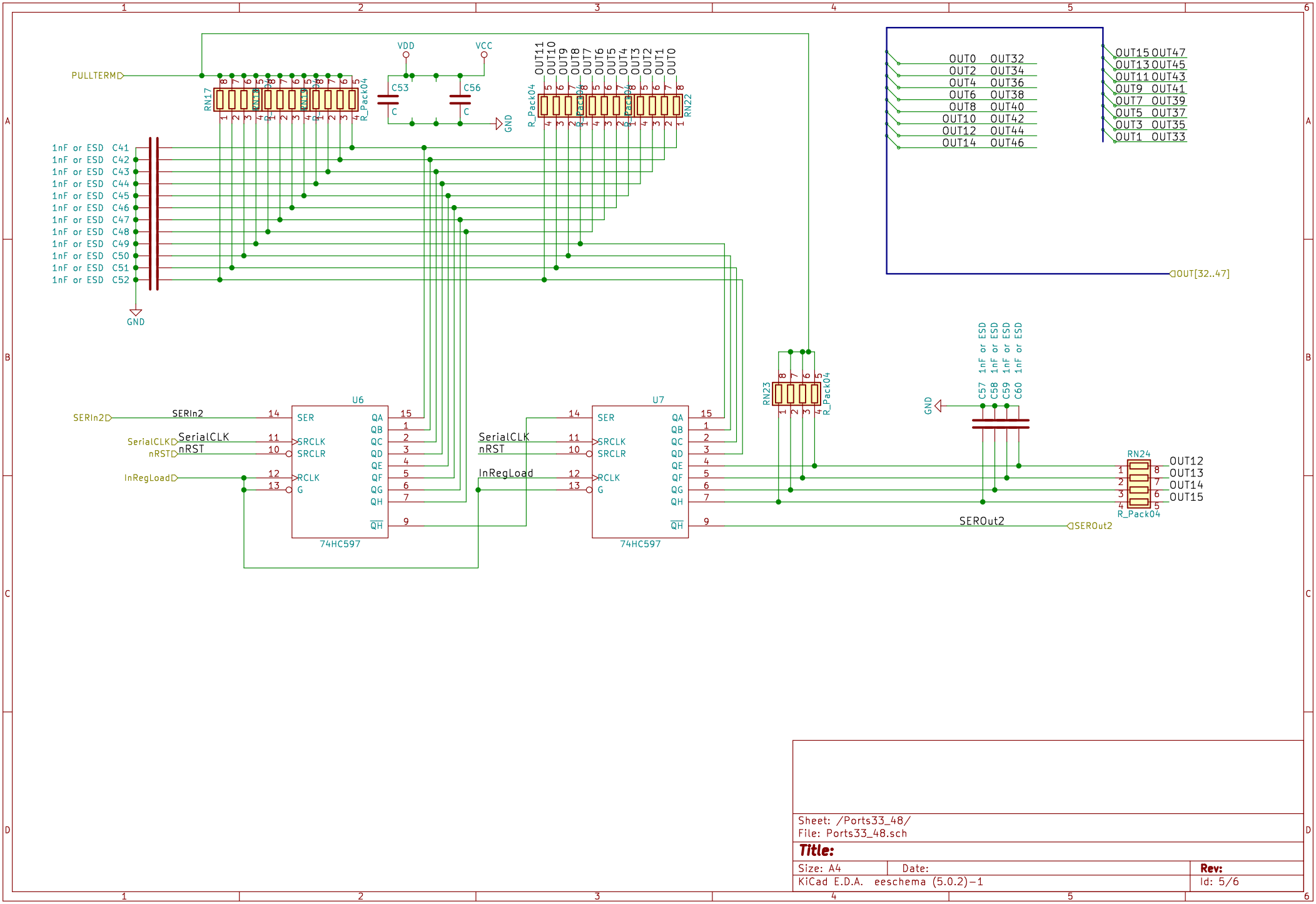

Sheet: /Ports33_48/
File: Ports33_48.sch

Title:

Size: A4	Date:	Rev:
KiCad E.D.A. eeschema (5.0.2)-1		Id: 5/6

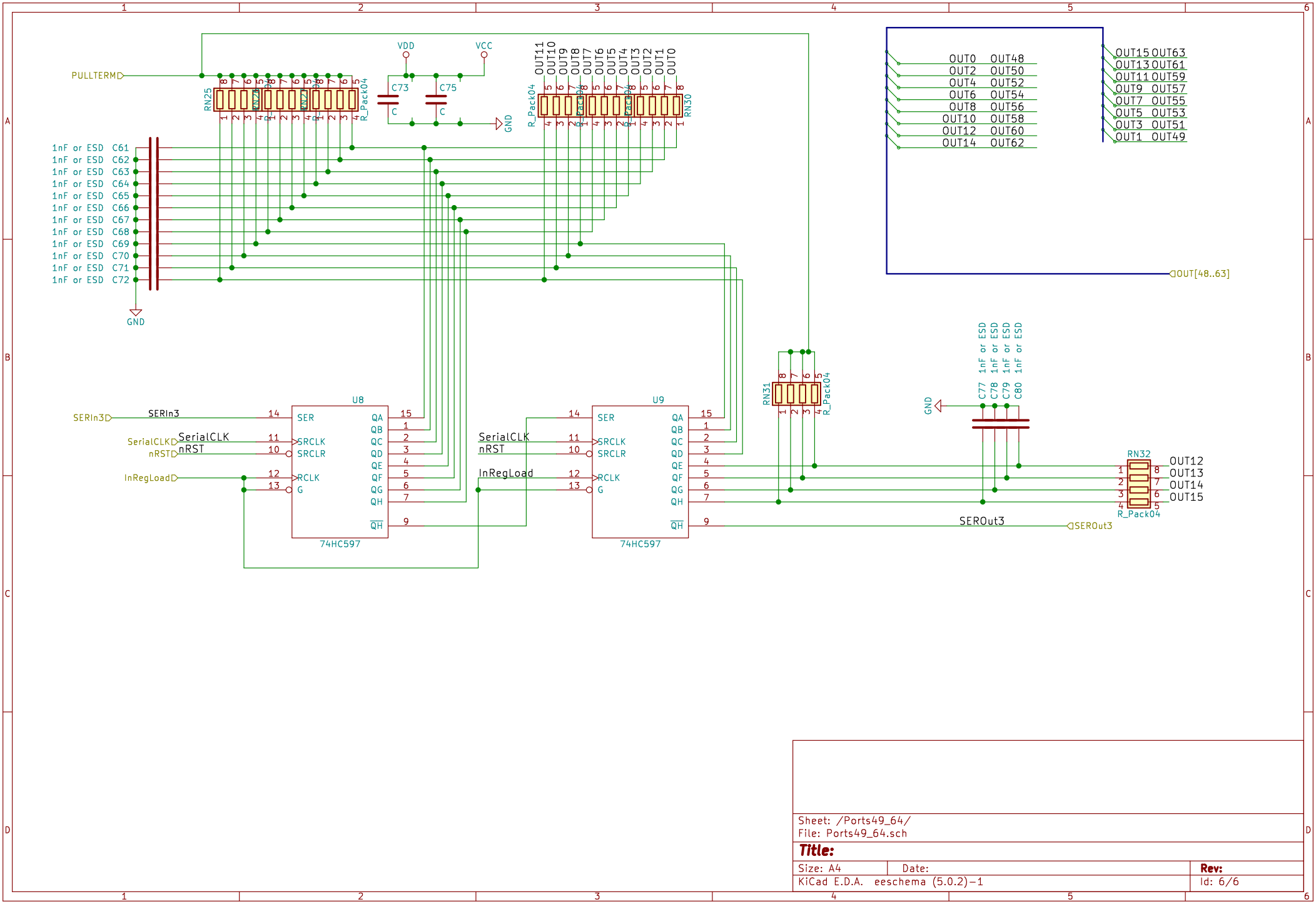

Sheet: /Ports49_64/
File: Ports49_64.sch

Title:

Size: A4	Date:	Rev:
KiCad E.D.A. eeschema (5.0.2)-1		Id: 6/6